REVISIONS				
ZONE	REV.	DESCRIPTION	DATE	APPROVED

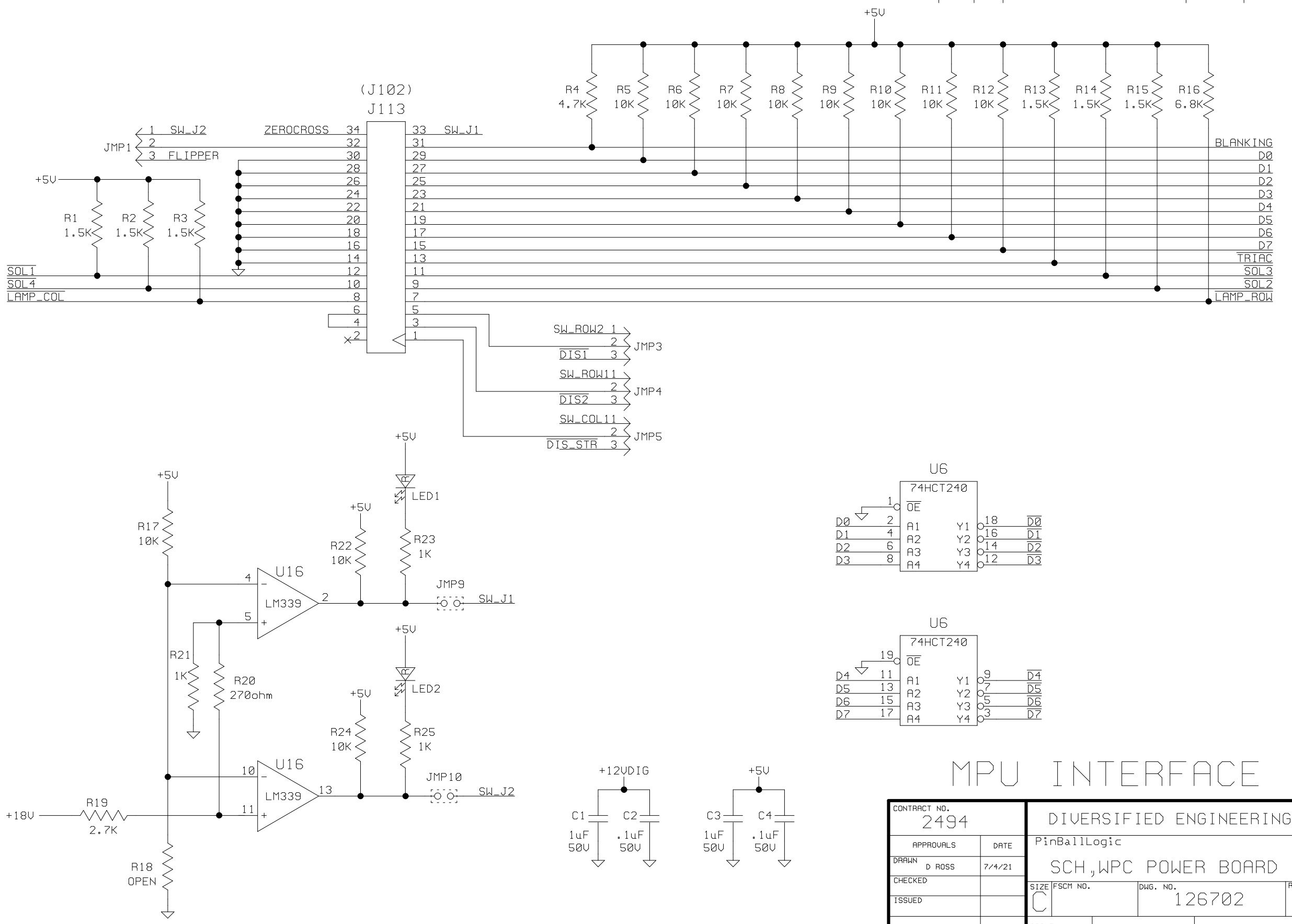

MPU INTERFACE

CONTRACT NO. 2494		DIVERSIFIED ENGINEERING
APPROVALS	DATE	PinBallLogic
DRAWN D ROSS	7/4/21	SCH, WPC POWER BOARD
CHECKED		SIZE C · FSCM NO. · DWG. NO. 126702 · REV. A
ISSUED		SCALE · SHEET 1 OF 12

DWG NO. · SH · REV.

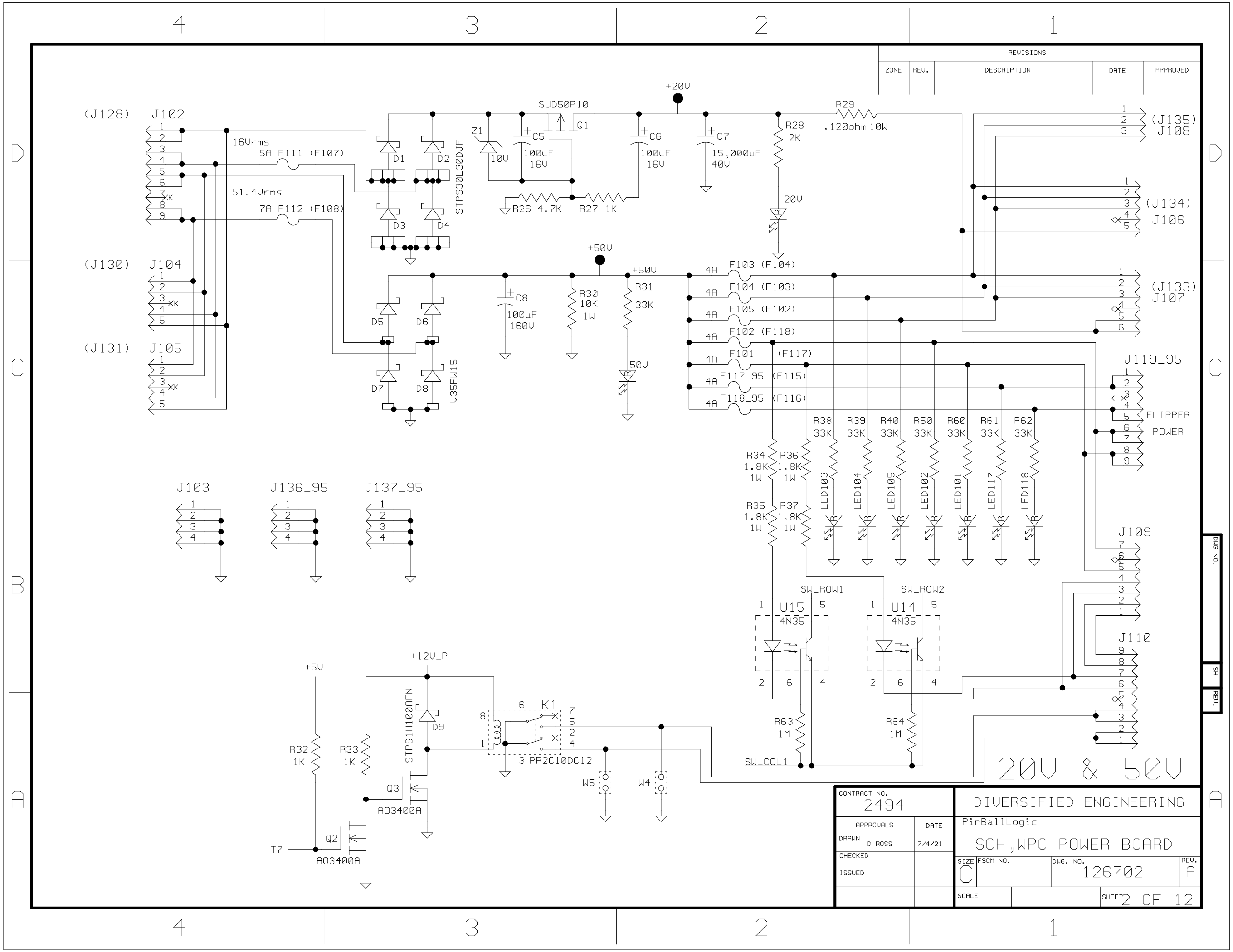
REVISIONS
ZONE
REV.
DESCRIPTION
DATE
APPROVED
(J128) J102
16Vrms
5A F111 (F107)
51.4Vrms
7A F112 (F108)
STPS30L30DJF
D1
D2
D3
D4
Z1
10V
SUD50P10
Q1
C5
100uF
16V
C6
100uF
16V
C7
15,000uF
40V
R26 4.7K
R27 1K
+20V
R28
2K
20V
R29
.120ohm 10W
(J135)
J108
(J134)
J106
(J133)
J107
(J130) J104
(J131) J105
D5
D6
D7
D8
U35PW15
C8
100uF
160V
R30
10K
1W
+50V
R31
33K
50V
F103 (F104)
F104 (F103)
F105 (F102)
F102 (F118)
F101 (F117)
F117_95 (F115)
F118_95 (F116)
J119_95
FLIPPER
POWER
R38 33K
R39 33K
R40 33K
R50 33K
R60 33K
R61 33K
R62 33K
R34 1.8K 1W
R36 1.8K 1W
R35 1.8K 1W
R37 1.8K 1W
LED103
LED104
LED105
LED102
LED101
LED117
LED118
J109
J110
SW_ROW1
SW_ROW2
U15
4N35
U14
4N35
R63
1M
R64
1M
SW_COL1
J103
J136_95
J137_95
+5V
+12V_P
STPS1H100AFN
D9
K1
PR2C10DC12
R32
1K
R33
1K
Q3
AO3400A
Q2
AO3400A
T7
W5
W4
20V & 50V
CONTRACT NO.
2494
APPROVALS
DATE
DRAWN
D ROSS
7/4/21
CHECKED
ISSUED
DIVERSIFIED ENGINEERING
PinBallLogic
SCH,WPC POWER BOARD
SIZE
C
FSCM NO.
DWG. NO.
126702
REV.
A
SCALE
SHEET 2 OF 12
DWG NO.
SH
REV.

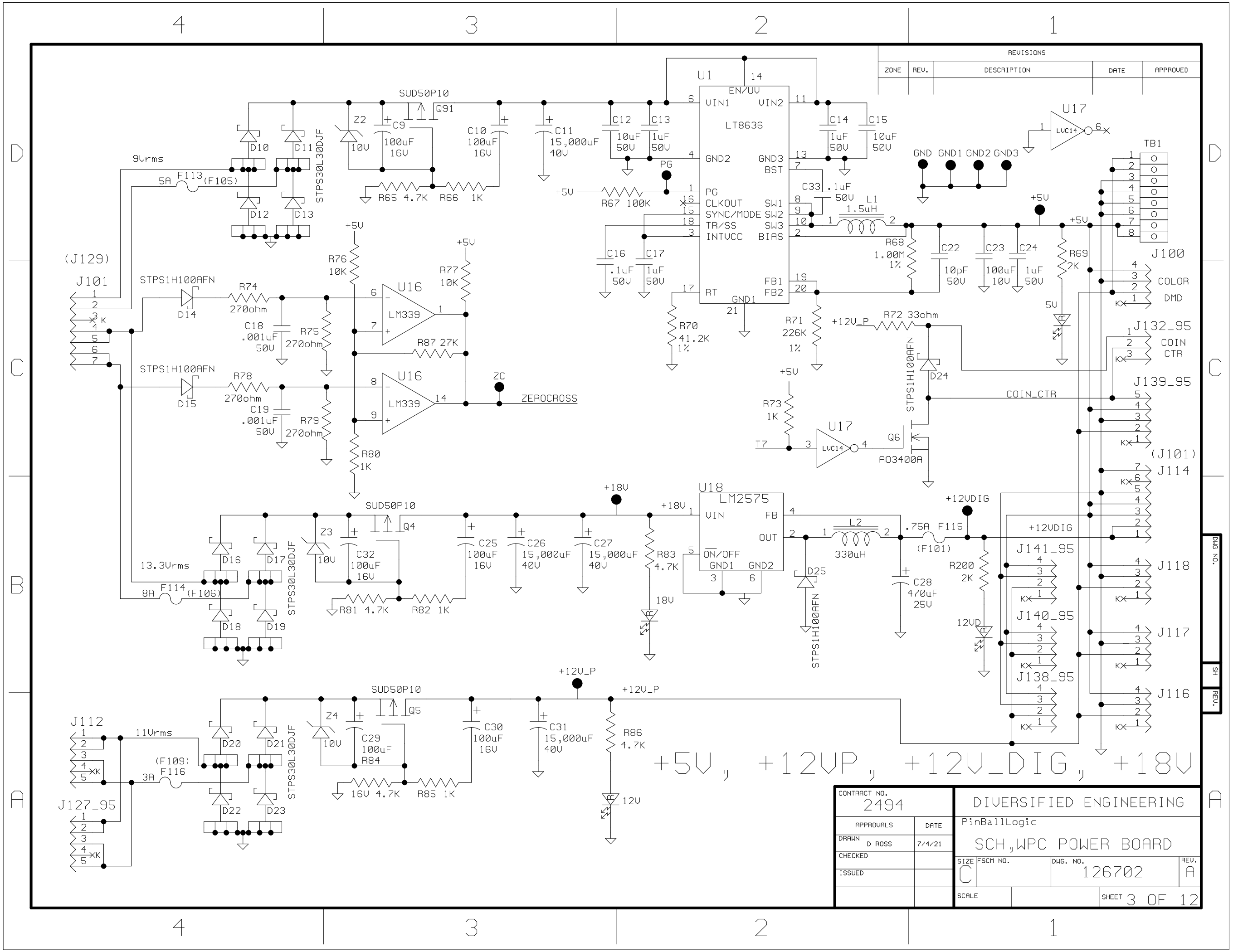
REVISIONS
ZONE
REV.
DESCRIPTION
DATE
APPROVED
U1
LT8636
EN/UV
VIN1
VIN2
GND2
GND3
BST
PG
CLKOUT
SYNC/MODE
TR/SS
INTVCC
SW1
SW2
SW3
BIAS
FB1
FB2
RT
GND1
SUD50P10
Q91
Q4
Q5
Q6
AO3400A
STPS30L30DJF
STPS1H100AFN
9Vrms
13.3Vrms
11Vrms
F113 (F105) 5A
F114 (F106) 8A
F116 (F109) 3A
F115 (F101) .75A
(J129)
J101
J112
J127_95
U16
LM339
ZC
ZEROCROSS
U17
LVC14
U18
LM2575
VIN
FB
OUT
ON/OFF
GND1
GND2
+18V
+12V_P
+12VDIG
+5V
GND GND1 GND2 GND3
TB1
J100
COLOR
DMD
J132_95
COIN
CTR
J139_95
COIN_CTR
(J101)
J114
J118
J117
J116
J141_95
J140_95
J138_95
+5V, +12VP, +12V_DIG, +18V
CONTRACT NO.
2494
APPROVALS
DATE
DRAWN
D ROSS
7/4/21
CHECKED
ISSUED
DIVERSIFIED ENGINEERING
PinBallLogic
SCH, WPC POWER BOARD
SIZE
C
FSCM NO.
DWG. NO.
126702
REV.
A
SCALE
SHEET 3 OF 12
DWG NO.
SH
REV.

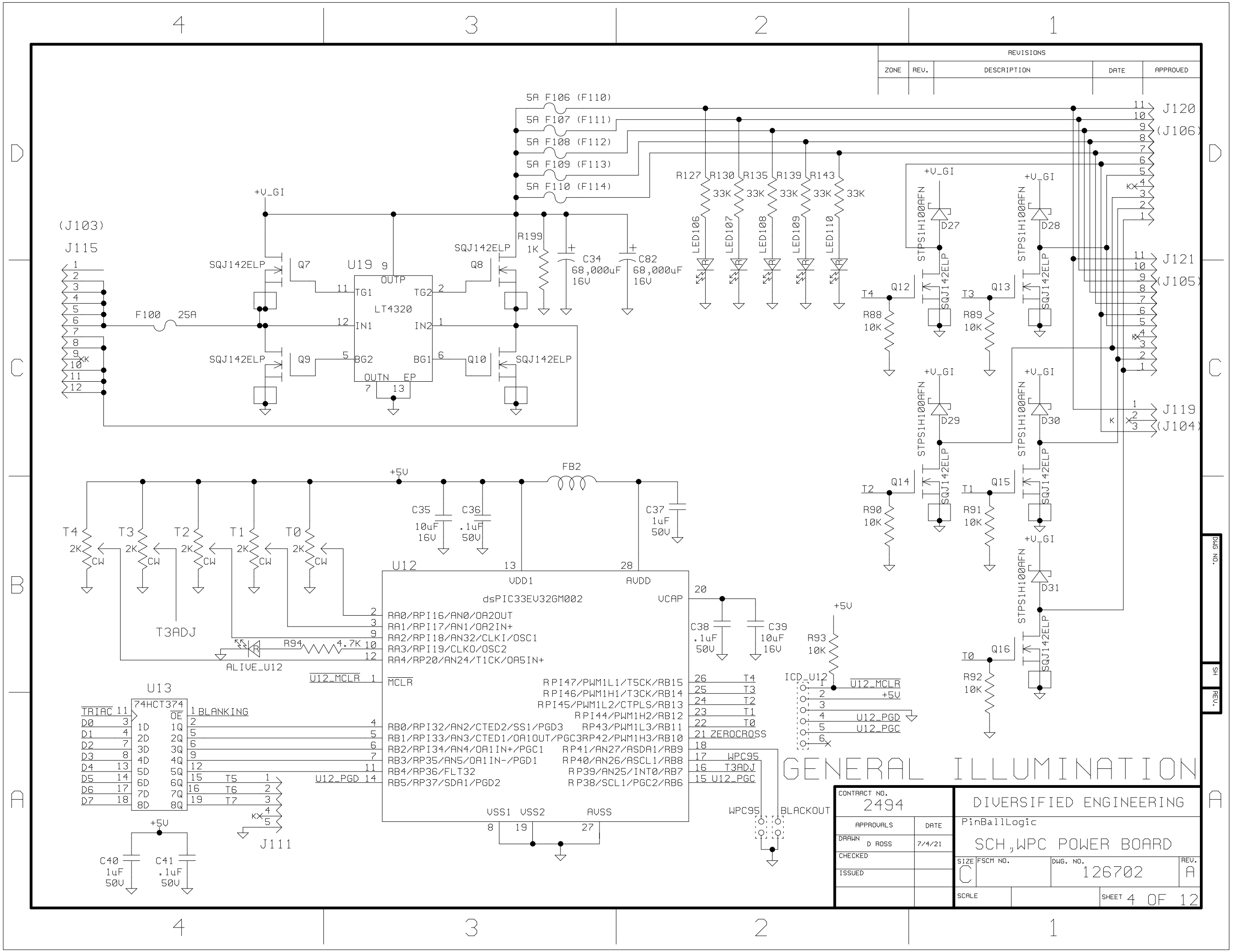
REVISIONS
ZONE
REV.
DESCRIPTION
DATE
APPROVED
5A F106 (F110)
5A F107 (F111)
5A F108 (F112)
5A F109 (F113)
5A F110 (F114)
J120
(J106)
J121
(J105)
J119
(J104)
(J103)
J115
F100 25A
+V_GI
SQJ142ELP
Q7
Q8
Q9
Q10
U19
LT4320
OUTP
TG1
TG2
IN1
IN2
BG2
BG1
OUTN
EP
R199
1K
C34
68,000uF
16V
C82
68,000uF
16V
R127
R130
R135
R139
R143
33K
LED106
LED107
LED108
LED109
LED110
STPS1H100AFN
D27
D28
D29
D30
D31
Q12
Q13
Q14
Q15
Q16
R88
10K
R89
10K
R90
10K
R91
10K
R92
10K
R93
10K
+5V
FB2
C35
10uF
16V
C36
.1uF
50V
C37
1uF
50V
T4
T3
T2
T1
T0
2K
CW
T3ADJ
R94
4.7K
ALIVE_U12
U12
dsPIC33EV32GM002
VDD1
AVDD
VCAP
C38
.1uF
50V
C39
10uF
16V
U12_MCLR
MCLR
RA0/RPI16/AN0/OA2OUT
RA1/RPI17/AN1/OA2IN+
RA2/RPI18/AN32/CLKI/OSC1
RA3/RPI19/CLKO/OSC2
RA4/RP20/AN24/T1CK/OA5IN+
RPI47/PWM1L1/T5CK/RB15
RPI46/PWM1H1/T3CK/RB14
RPI45/PWM1L2/CTPLS/RB13
RPI44/PWM1H2/RB12
RB0/RPI32/AN2/CTED2/SS1/PGD3
RP43/PWM1L3/RB11
RB1/RPI33/AN3/CTED1/OA1OUT/PGC3
RP42/PWM1H3/RB10
RB2/RPI34/AN4/OA1IN+/PGC1
RP41/AN27/ASDA1/RB9
RB3/RPI35/AN5/OA1IN-/PGD1
RP40/AN26/ASCL1/RB8
RB4/RP36/FLT32
RP39/AN25/INT0/RB7
RB5/RP37/SDA1/PGD2
RP38/SCL1/PGC2/RB6
U12_PGD
ZEROCROSS
WPC95
T3ADJ
U12_PGC
VSS1
VSS2
AVSS
ICD_U12
U12_PGD
U12_PGC
U13
74HCT374
TRIAC
D0
D1
D2
D3
D4
D5
D6
D7
BLANKING
OE
J111
C40
1uF
50V
C41
.1uF
50V
BLACKOUT
GENERAL ILLUMINATION
CONTRACT NO.
2494
APPROVALS
DATE
DRAWN
D ROSS
7/4/21
CHECKED
ISSUED
DIVERSIFIED ENGINEERING
PinBallLogic
SCH,WPC POWER BOARD
SIZE
C
FSCM NO.
DWG. NO.
126702
REV.
A
SCALE
SHEET 4 OF 12
DWG NO.
SH
REV.

REVISIONS				
ZONE	REV.	DESCRIPTION	DATE	APPROVED

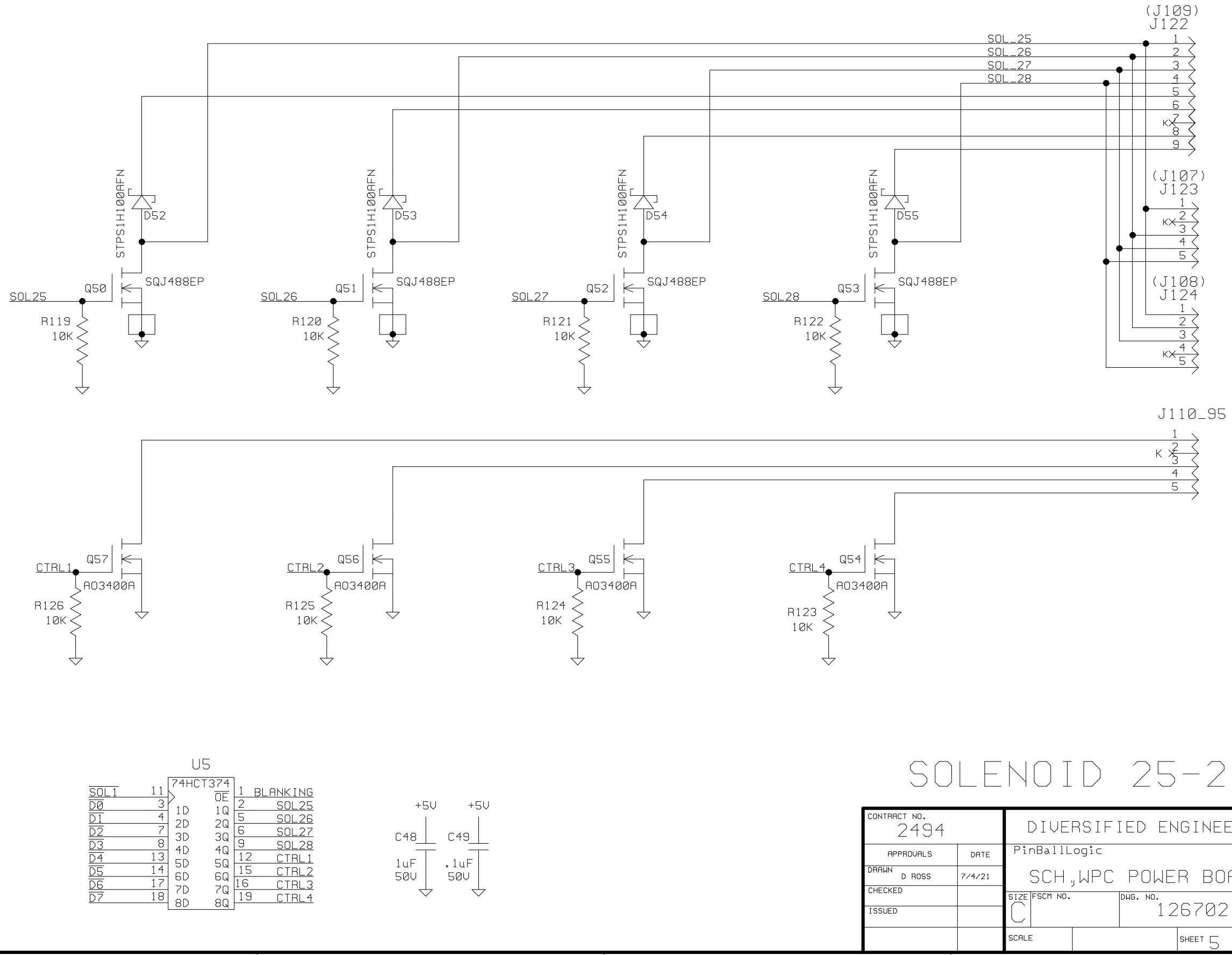

SOLENOID 25-28

CONTRACT NO. 2494		DIVERSIFIED ENGINEERING	
APPROVALS	DATE	PinBallLogic	
DRAWN D ROSS	7/4/21	SCH,WPC POWER BOARD	
CHECKED		SIZE C / FSCM NO.	DWG. NO. 126702 / REV. A
ISSUED		SCALE	SHEET 5 OF 12

DWG NO.
SH
REV.

REVISIONS				
ZONE	REV.	DESCRIPTION	DATE	APPROVED

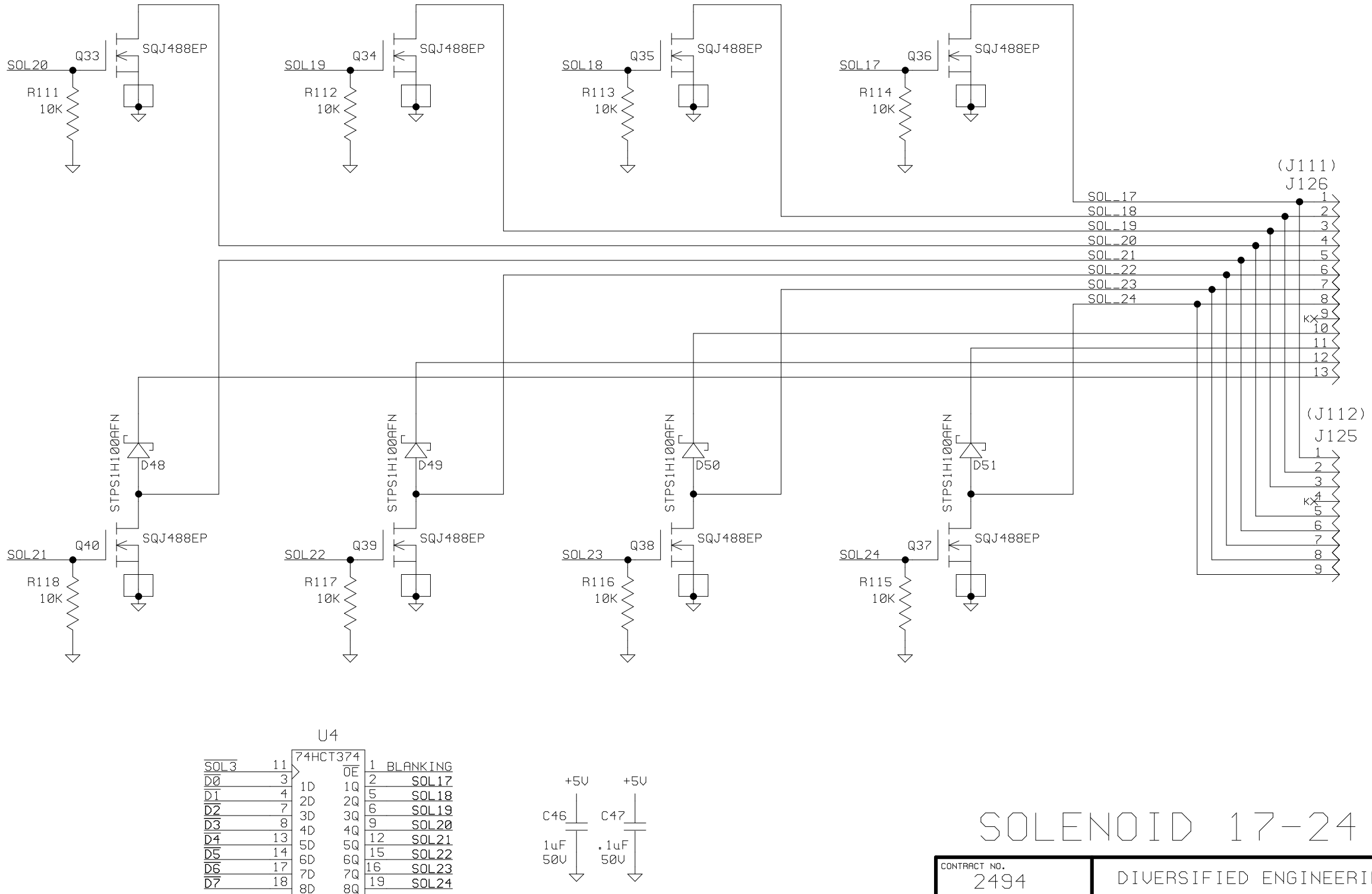

SOLENOID 17-24

CONTRACT NO. 2494		DIVERSIFIED ENGINEERING	
APPROVALS	DATE	PinBallLogic	
DRAWN D ROSS	7/4/21	SCH,WPC POWER BOARD	
CHECKED		SIZE C / FSCM NO.	DWG. NO. 126702 / REV. A
ISSUED		SCALE	SHEET 6 OF 12

DWG NO.
SH
REV.

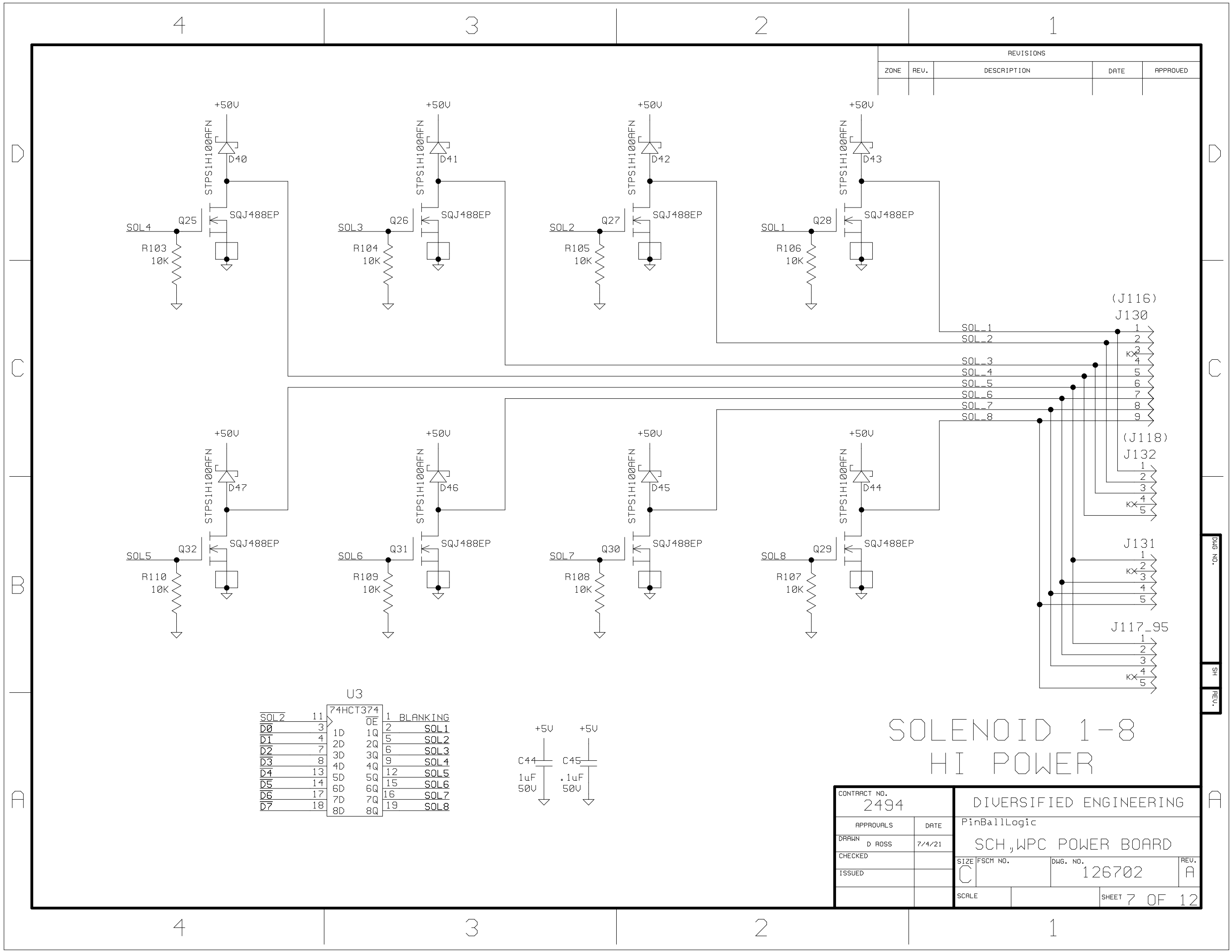
REVISIONS
ZONE
REV.
DESCRIPTION
DATE
APPROVED
+50V
STPS1H100AFN
D40
D41
D42
D43
D47
D46
D45
D44
SQJ488EP
Q25
Q26
Q27
Q28
Q32
Q31
Q30
Q29
SOL4
SOL3
SOL2
SOL1
SOL5
SOL6
SOL7
SOL8
R103 10K
R104 10K
R105 10K
R106 10K
R110 10K
R109 10K
R108 10K
R107 10K
(J116)
J130
(J118)
J132
J131
J117_95
SOL_1
SOL_2
SOL_3
SOL_4
SOL_5
SOL_6
SOL_7
SOL_8
KX
U3
74HCT374
SOL2
D0
D1
D2
D3
D4
D5
D6
D7
1D
2D
3D
4D
5D
6D
7D
8D
OE
1Q
2Q
3Q
4Q
5Q
6Q
7Q
8Q
BLANKING
SOL1
SOL2
SOL3
SOL4
SOL5
SOL6
SOL7
SOL8
+5V
C44
1uF
50V
C45
.1uF
50V
SOLENOID 1-8
HI POWER
CONTRACT NO.
2494
APPROVALS
DATE
DRAWN
D ROSS
7/4/21
CHECKED
ISSUED
DIVERSIFIED ENGINEERING
PinBallLogic
SCH,WPC POWER BOARD
SIZE
C
FSCM NO.
DWG. NO.
126702
REV.
A
SCALE
SHEET 7 OF 12
DWG NO.
SH
REV.

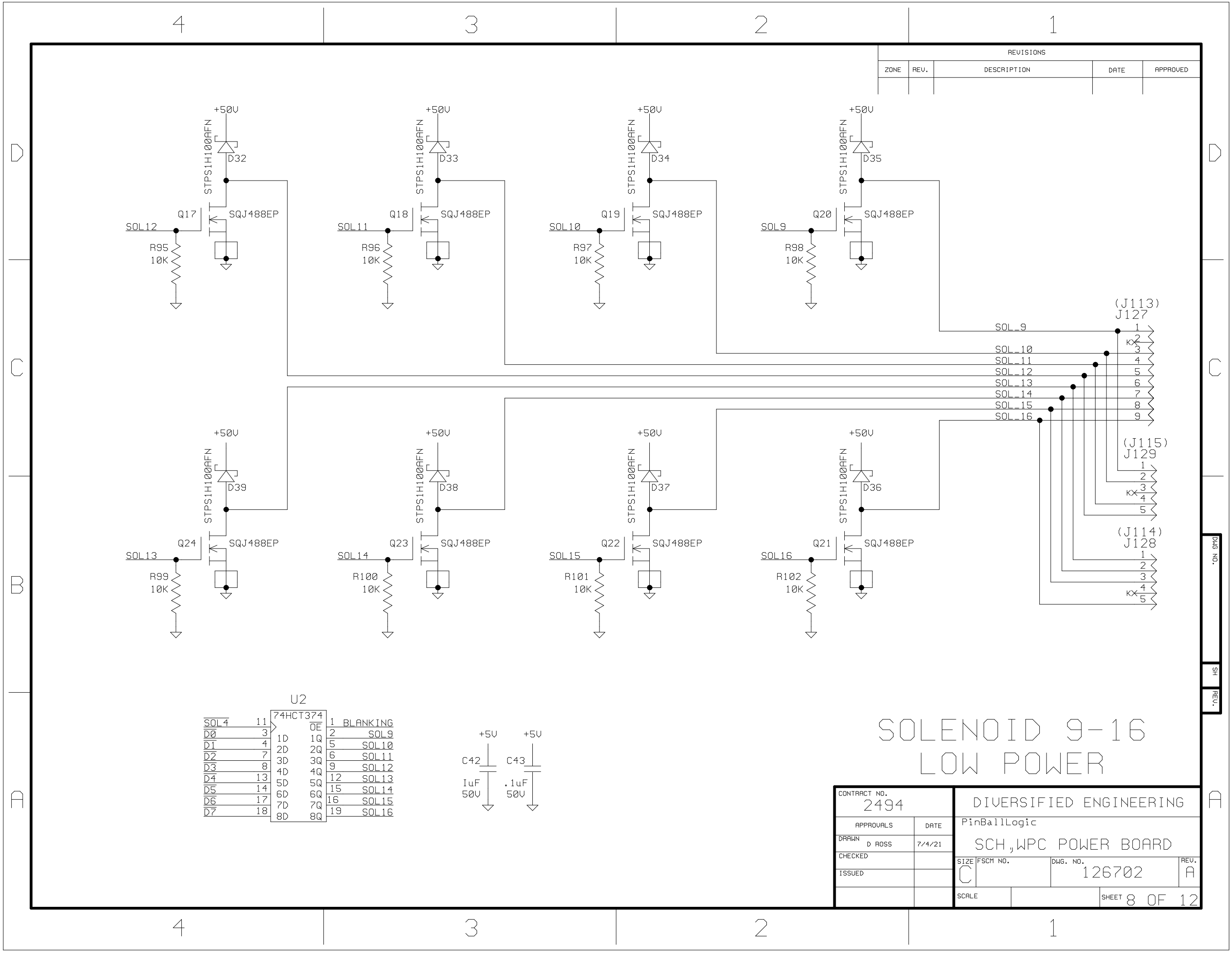
REVISIONS
ZONE
REV.
DESCRIPTION
DATE
APPROVED
+50V
STPS1H100AFN
D32
D33
D34
D35
D39
D38
D37
D36
Q17
Q18
Q19
Q20
Q24
Q23
Q22
Q21
SQJ488EP
SOL12
SOL11
SOL10
SOL9
SOL13
SOL14
SOL15
SOL16
R95
R96
R97
R98
R99
R100
R101
R102
10K
(J113)
J127
(J115)
J129
(J114)
J128
SOL_9
SOL_10
SOL_11
SOL_12
SOL_13
SOL_14
SOL_15
SOL_16
U2
74HCT374
SOL4
D0
D1
D2
D3
D4
D5
D6
D7
1D
2D
3D
4D
5D
6D
7D
8D
OE
1Q
2Q
3Q
4Q
5Q
6Q
7Q
8Q
BLANKING
+5V
C42
C43
1uF
50V
.1uF
50V
SOLENOID 9-16
LOW POWER
CONTRACT NO.
2494
APPROVALS
DATE
DRAWN
D ROSS
7/4/21
CHECKED
ISSUED
DIVERSIFIED ENGINEERING
PinBallLogic
SCH,WPC POWER BOARD
SIZE
C
FSCM NO.
DWG. NO.
126702
REV.
A
SCALE
SHEET 8 OF 12
DWG. NO.
SH
REV.

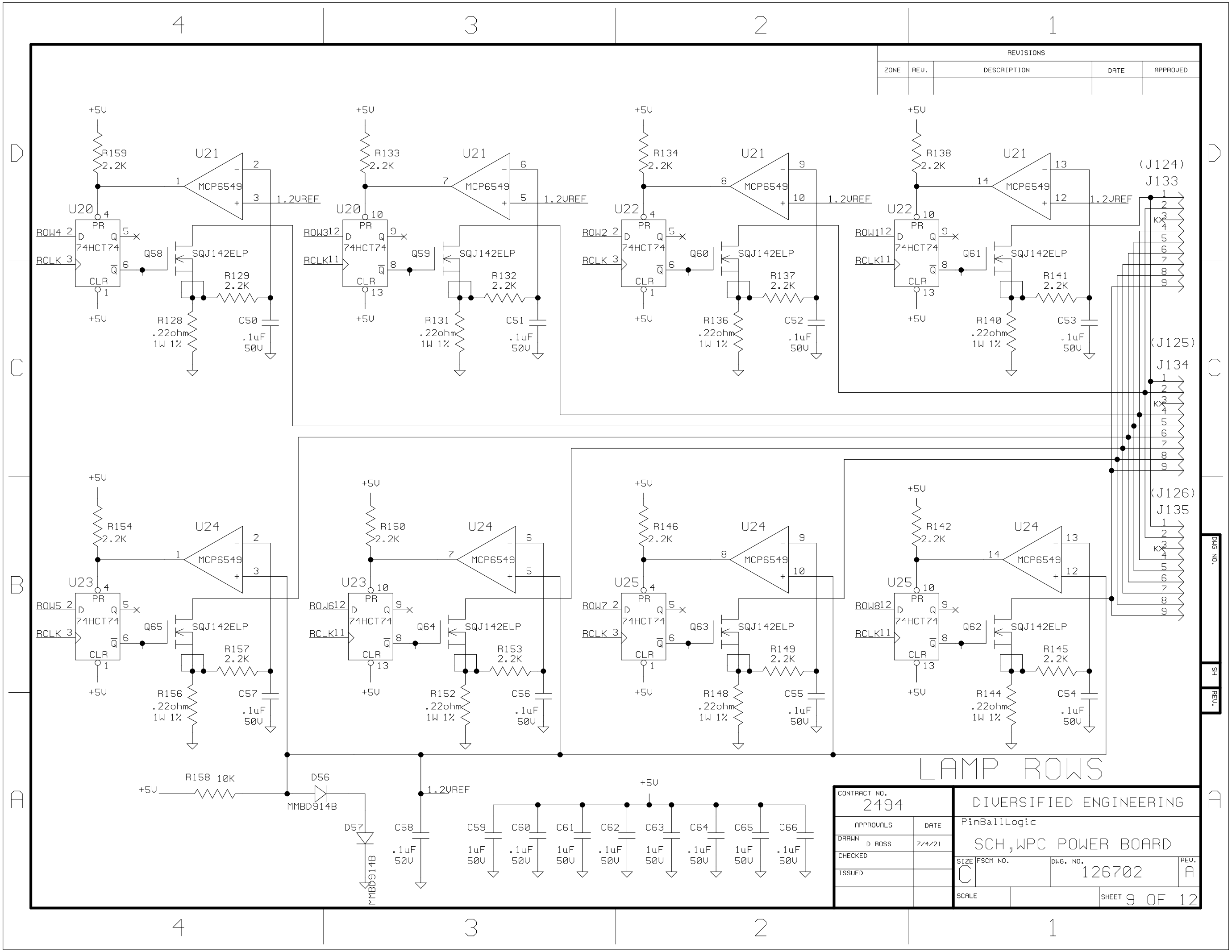
REVISIONS
ZONE
REV.
DESCRIPTION
DATE
APPROVED
U20
U21
U22
U23
U24
U25
74HCT74
MCP6549
SQJ142ELP
1.2VREF
+5V
ROW4
RCLK
ROW3
ROW2
ROW1
ROW5
ROW6
ROW7
ROW8
Q58
Q59
Q60
Q61
Q65
Q64
Q63
Q62
R159 2.2K
R133 2.2K
R134 2.2K
R138 2.2K
R154 2.2K
R150 2.2K
R146 2.2K
R142 2.2K
R128 .22ohm 1W 1%
R131 .22ohm 1W 1%
R136 .22ohm 1W 1%
R140 .22ohm 1W 1%
R156 .22ohm 1W 1%
R152 .22ohm 1W 1%
R148 .22ohm 1W 1%
R144 .22ohm 1W 1%
R129 2.2K
R132 2.2K
R137 2.2K
R141 2.2K
R157 2.2K
R153 2.2K
R149 2.2K
R145 2.2K
C50 .1uF 50V
C51 .1uF 50V
C52 .1uF 50V
C53 .1uF 50V
C57 .1uF 50V
C56 .1uF 50V
C55 .1uF 50V
C54 .1uF 50V
(J124) J133
(J125) J134
(J126) J135
R158 10K
D56 MMBD914B
D57 MMBD914B
C58 .1uF 50V
C59 1uF 50V
C60 .1uF 50V
C61 1uF 50V
C62 .1uF 50V
C63 1uF 50V
C64 .1uF 50V
C65 1uF 50V
C66 .1uF 50V
LAMP ROWS
CONTRACT NO. 2494
APPROVALS
DATE
DRAWN D ROSS 7/4/21
CHECKED
ISSUED
DIVERSIFIED ENGINEERING
PinBallLogic
SCH,WPC POWER BOARD
SIZE C
FSCM NO.
DWG. NO. 126702
REV. A
SCALE
SHEET 9 OF 12
DWG NO.
SH
REV.

REVISIONS				
ZONE	REV.	DESCRIPTION	DATE	APPROVED

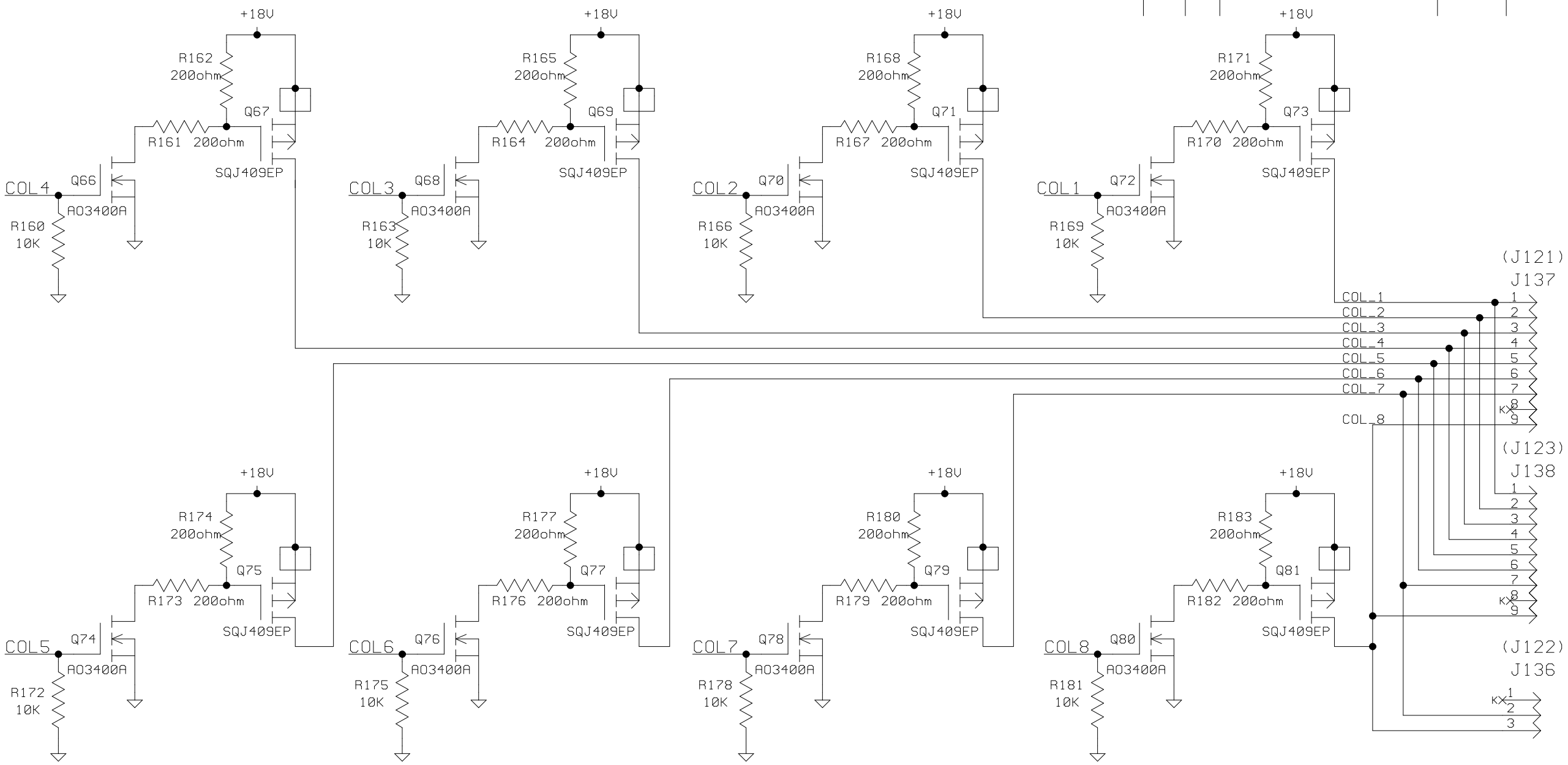

LAMP COLUMNS

CONTRACT NO. 2494		DIVERSIFIED ENGINEERING	
APPROVALS	DATE	PinBallLogic	
DRAWN D ROSS	7/4/21	SCH,WPC POWER BOARD	
CHECKED		SIZE C / FSCM NO. / DWG. NO. 126702	REV. A
ISSUED		SCALE	SHEET 10 OF 12

DWG NO. | SH | REV.

REVISIONS				
ZONE	REV.	DESCRIPTION	DATE	APPROVED

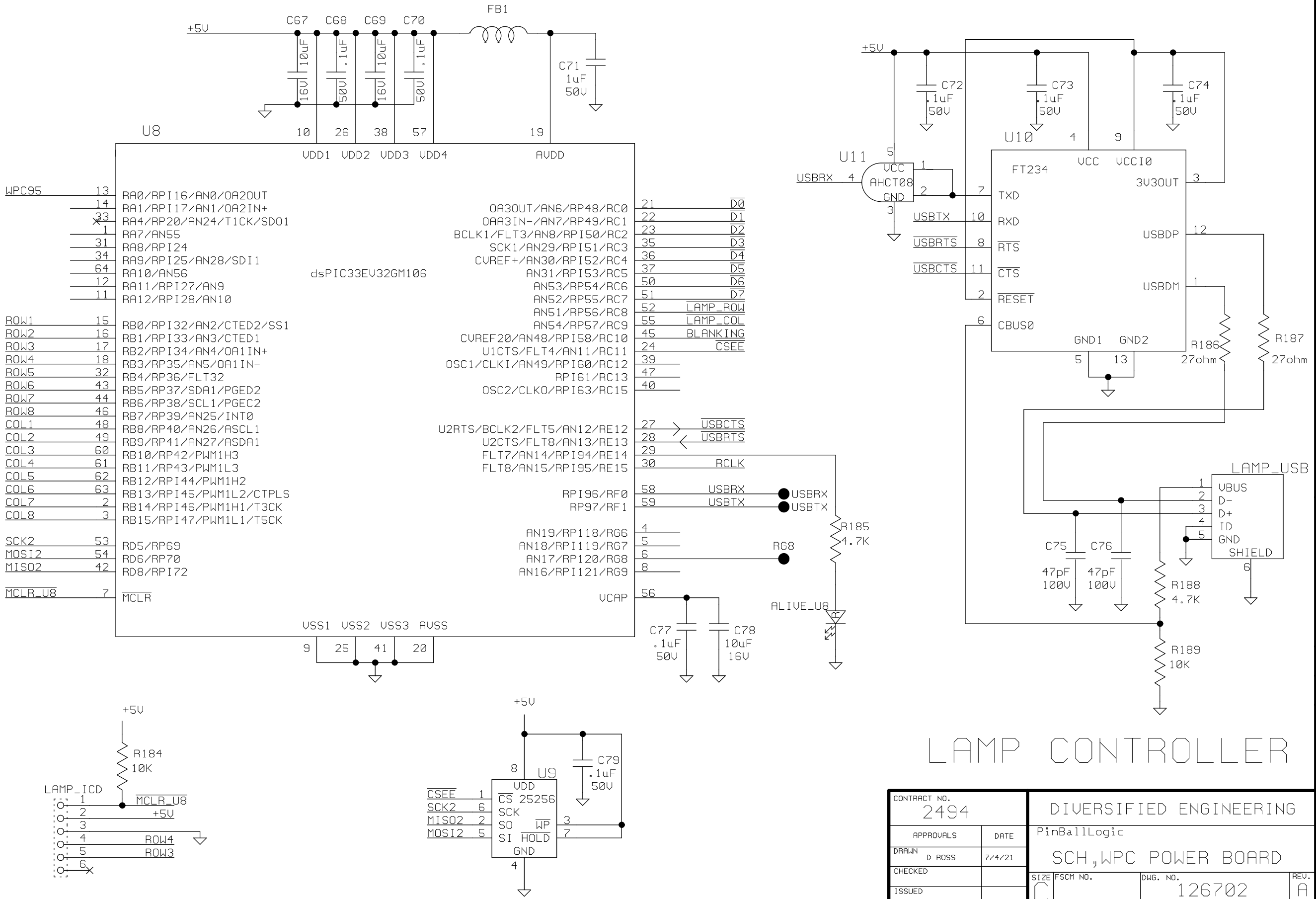

LAMP CONTROLLER

CONTRACT NO. 2494		DIVERSIFIED ENGINEERING	
APPROVALS	DATE	PinBallLogic	
DRAWN D ROSS	7/4/21	SCH,WPC POWER BOARD	
CHECKED		SIZE C / FSCM NO.	DWG. NO. 126702 / REV. A
ISSUED		SCALE	SHEET 11 OF 12

DWG NO. SH REV.

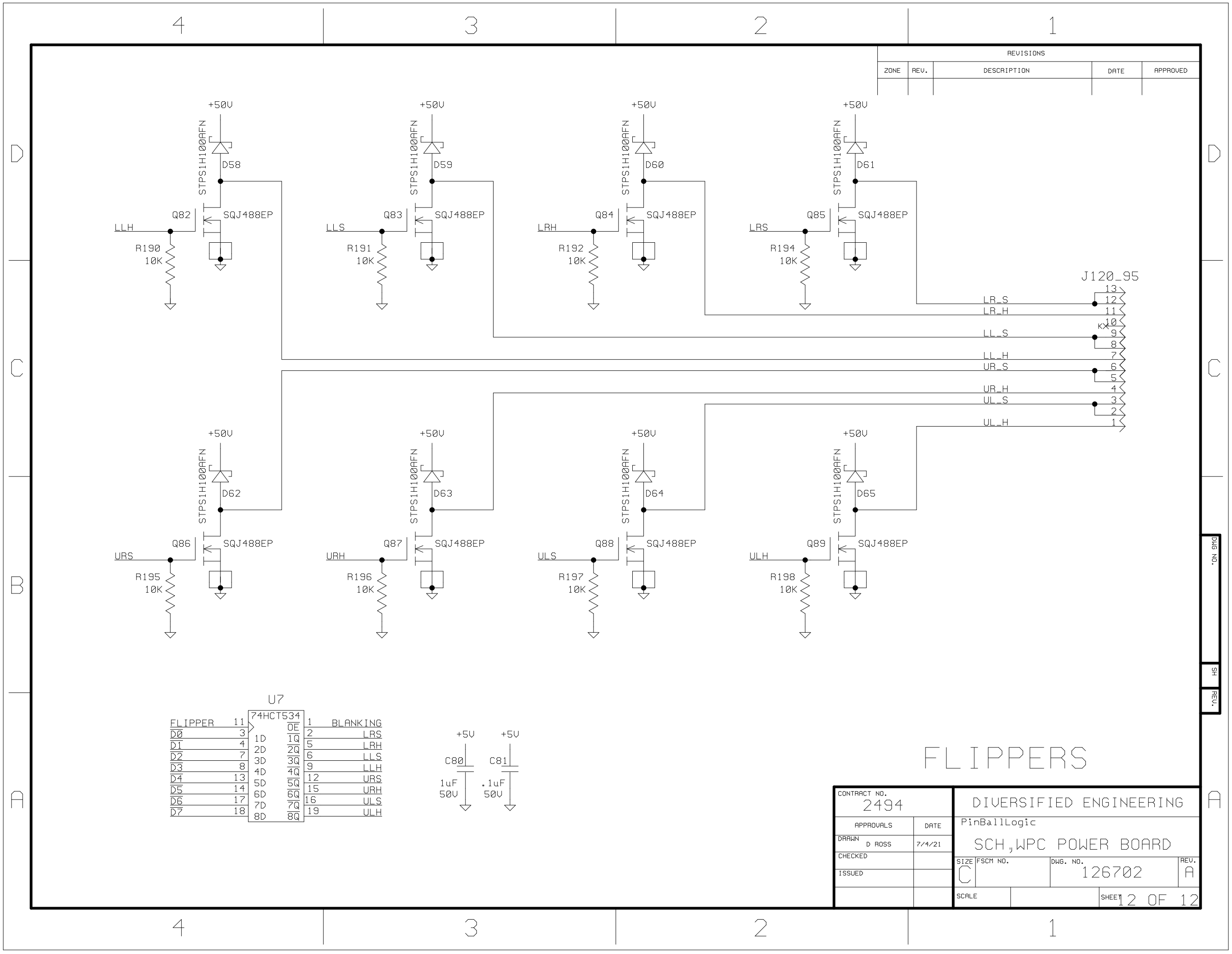
REVISIONS
ZONE
REV.
DESCRIPTION
DATE
APPROVED
+50V
STPS1H100AFN
D58
D59
D60
D61
D62
D63
D64
D65
Q82
Q83
Q84
Q85
Q86
Q87
Q88
Q89
SQJ488EP
LLH
LLS
LRH
LRS
URS
URH
ULS
ULH
R190
R191
R192
R194
R195
R196
R197
R198
10K
J120_95
LR_S
LR_H
LL_S
LL_H
UR_S
UR_H
UL_S
UL_H
U7
74HCT534
FLIPPER
D0
D1
D2
D3
D4
D5
D6
D7
1D
2D
3D
4D
5D
6D
7D
8D
OE
1Q
2Q
3Q
4Q
5Q
6Q
7Q
8Q
BLANKING
LRS
LRH
LLS
LLH
URS
URH
ULS
ULH
+5V
C80
C81
1uF
50V
.1uF
50V
FLIPPERS
CONTRACT NO.
2494
APPROVALS
DATE
DRAWN
D ROSS
7/4/21
CHECKED
ISSUED
DIVERSIFIED ENGINEERING
PinBallLogic
SCH,WPC POWER BOARD
SIZE
C
FSCM NO.
DWG. NO.
126702
REV.
A
SCALE
SHEET 12 OF 12
DWG NO.
SH
REV.